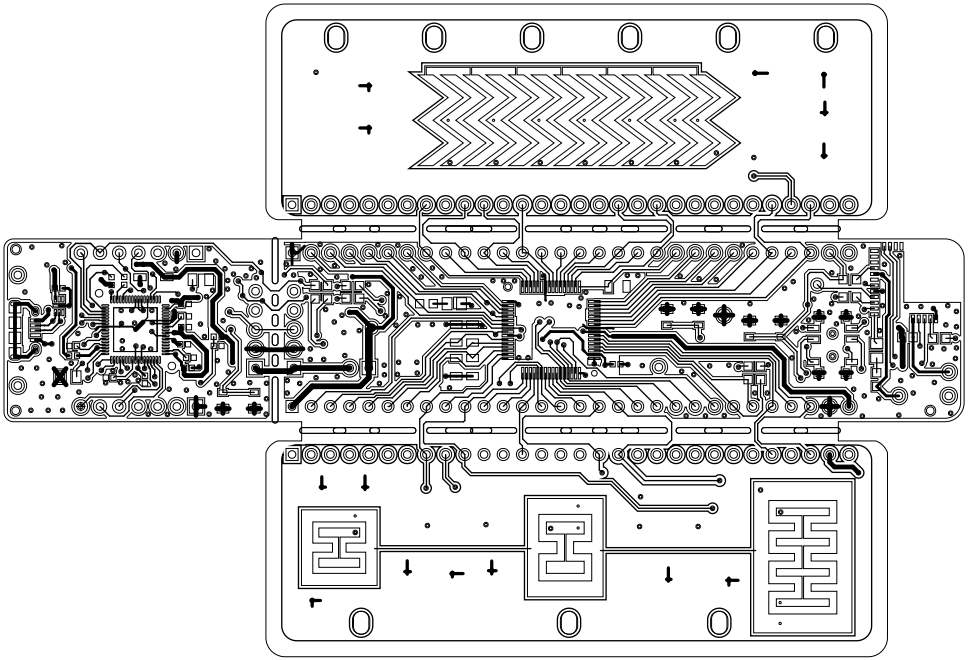

CYPRESS
EMBEDDED IN TOMORROW
SAN JOSE, CA 95134
(408) 943-2600

PROJECT: CY8CKIT-149 PSOC 4100S PLUS PROTOTYPING KIT			
DRAWN BY: PLATO			
LAYER: TOP			
DWG NO: 600-60476-01	REV: 04	DATE: 10/03/17	

ART FILM - BOTTOM

PROJECT: CY8CKIT-149 PSOC 4100S PLUS PROTOTYPING KIT			CYPRESS SEMICONDUCTOR
DRAWN BY: PLATO			198 CHAMPION COURT, SAN JOSE, CA 95134 (408) 943-2600
LAYER: BOTTOM			
DWG NO: 600-60476-01	REV: 04	DATE: 10/03/17	

ART FILM - BOTTOM

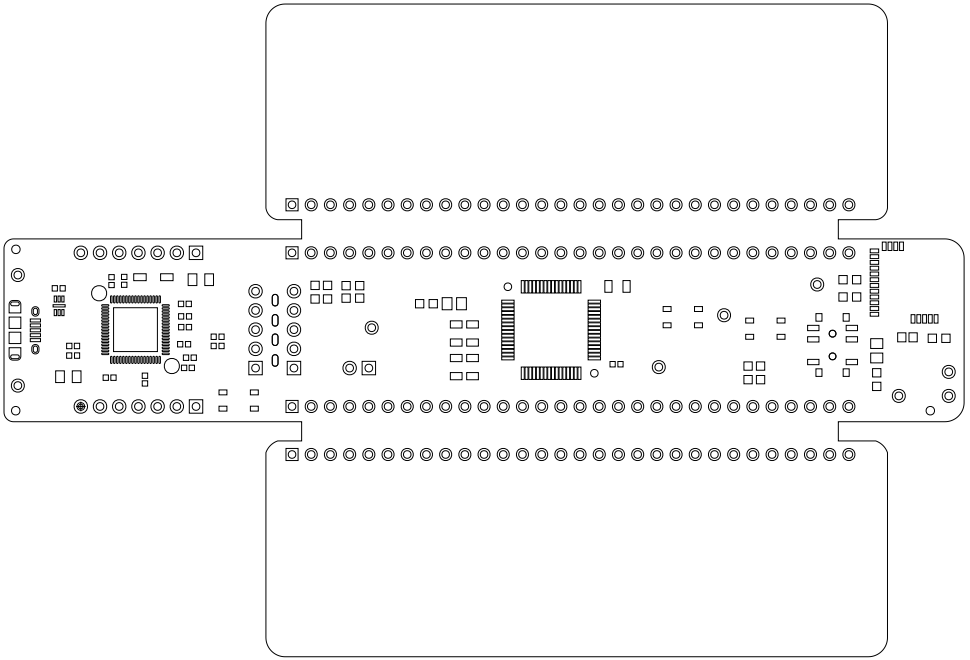

CYPRESS EMBEDDED IN TOMORROW	PROJECT: CY8CKIT-149 PSOC 4100S PLUS PROTOTYPING KIT		
	DRAWN BY: PLATO		
	LAYER: PRIMARY SOLDERMASK		
SAN JOSE, CA 95134 (408) 943-2600	DWG NO: 600-60476-01	REV: 04	DATE: 10/03/17

ART FILM - ssm

PROJECT: CY8CKIT-149 PSOC 4100S PLUS PROTOTYPING KIT		CYPRESS EMBEDDED IN TOMORROW SAN JOSE, CA 95134 (408) 943-2600
DRAWN BY: PLATO		
LAYER: SECONDARY SOLDERMASK		
DWG NO: 600-60476-01	REV: 04	DATE: 10/03/17

ART FILM - ssm

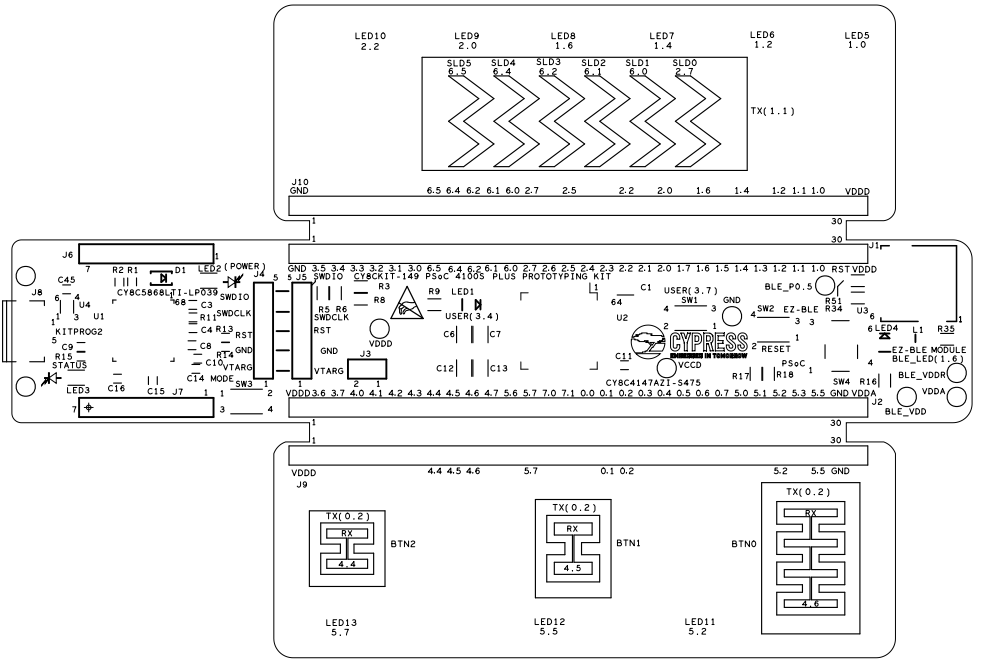

CYPRESS EMBEDDED IN TOMORROW	PROJECT: CY8CKIT-149 PSOC 4100S PLUS PROTOTYPING KIT		
SAN JOSE, CA 95134 (408) 943-2600	DRAWN BY: PLATO		
	LAYER: PRIMARY SILKSCREEN		
	DWG NO: 600-60476-01	REV: 04	DATE: 10/03/17

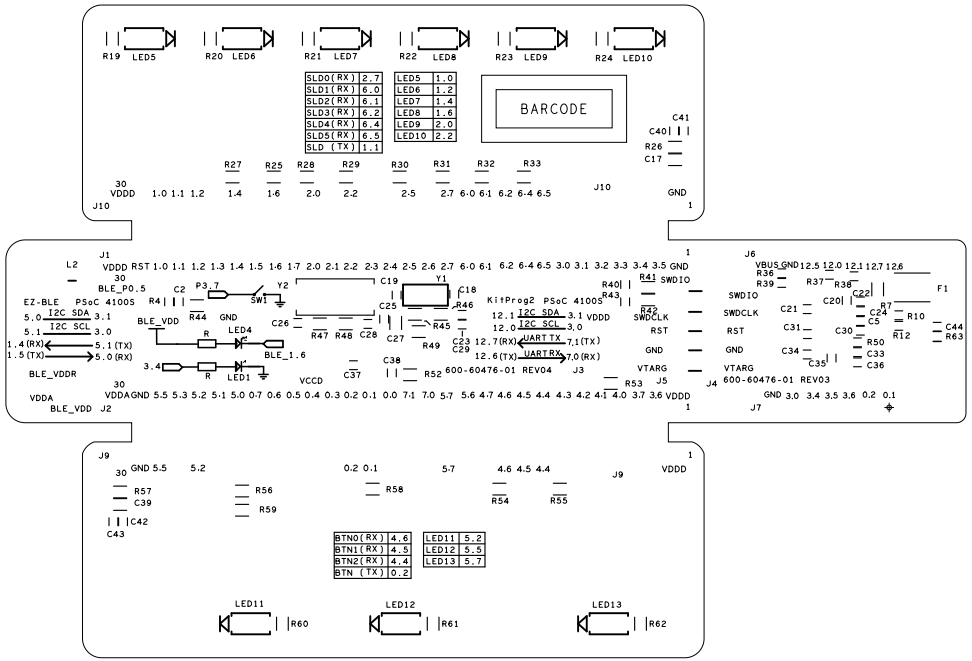

PROJECT: CY8CKIT-149 PSOC 4100S PLUS PROTOTYPING KIT	CYPRESS EMBEDDED IN TOMORROW
DRAWN BY: PLATO	
LAYER: SECONDARY SILKSCREEN	SAN JOSE, CA 95134 (408) 943-2600
DWG NO: 600-60476-01 REV: 04 DATE: 10/03/17	

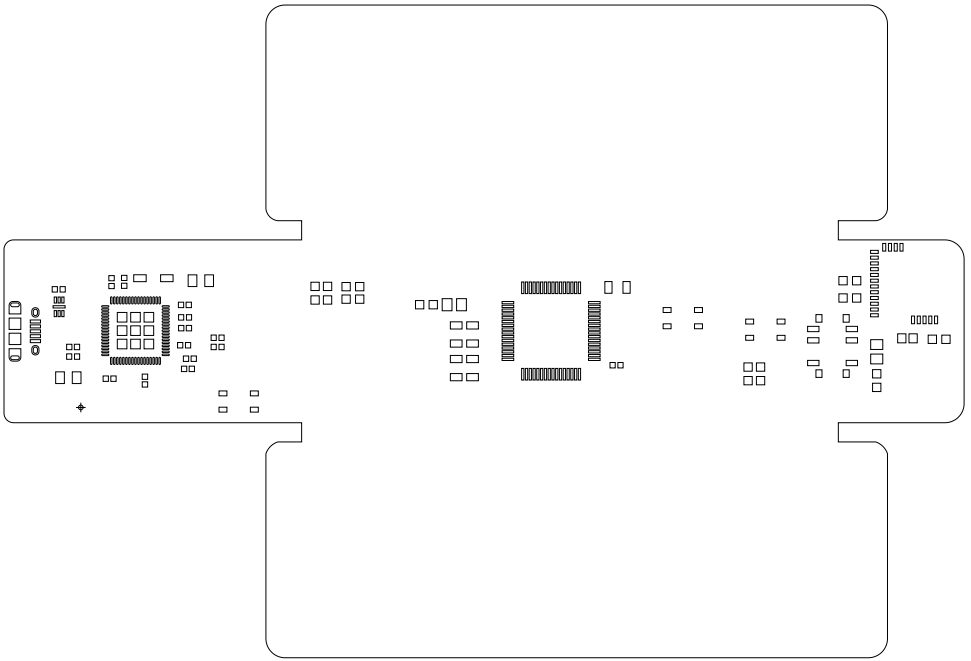

CYPRESS EMBEDDED IN TOMORROW SAN JOSE, CA 95134 (408) 943-2600	PROJECT: CY8CKIT-149 PSOC 4100S PLUS PROTOTYPING KIT		
	DRAWN BY: PLATO		
	LAYER: PRIMARY SOLDERPASTE		
	DWG NO: 600-60476-01	REV: 04	DATE: 10/03/17

ART FILM - ssp

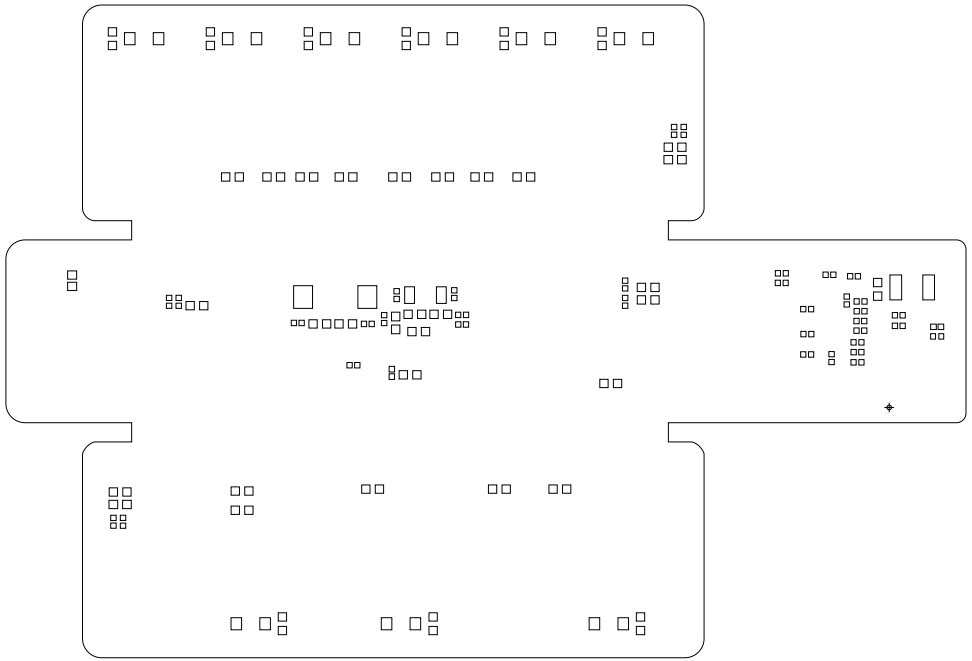

PROJECT: CY8CKIT-149 PSOC 4100S PLUS PROTOTYPING KIT			CYPRESS EMBEDDED IN TOMORROW SAN JOSE, CA 95134 (408) 943-2600
DRAWN BY: PLATO			
LAYER: SECONDARY SOLDERPASTE			
DWG NO: 600-60476-01	REV: 04	DATE: 10/03/17	

ART FILM - ssp